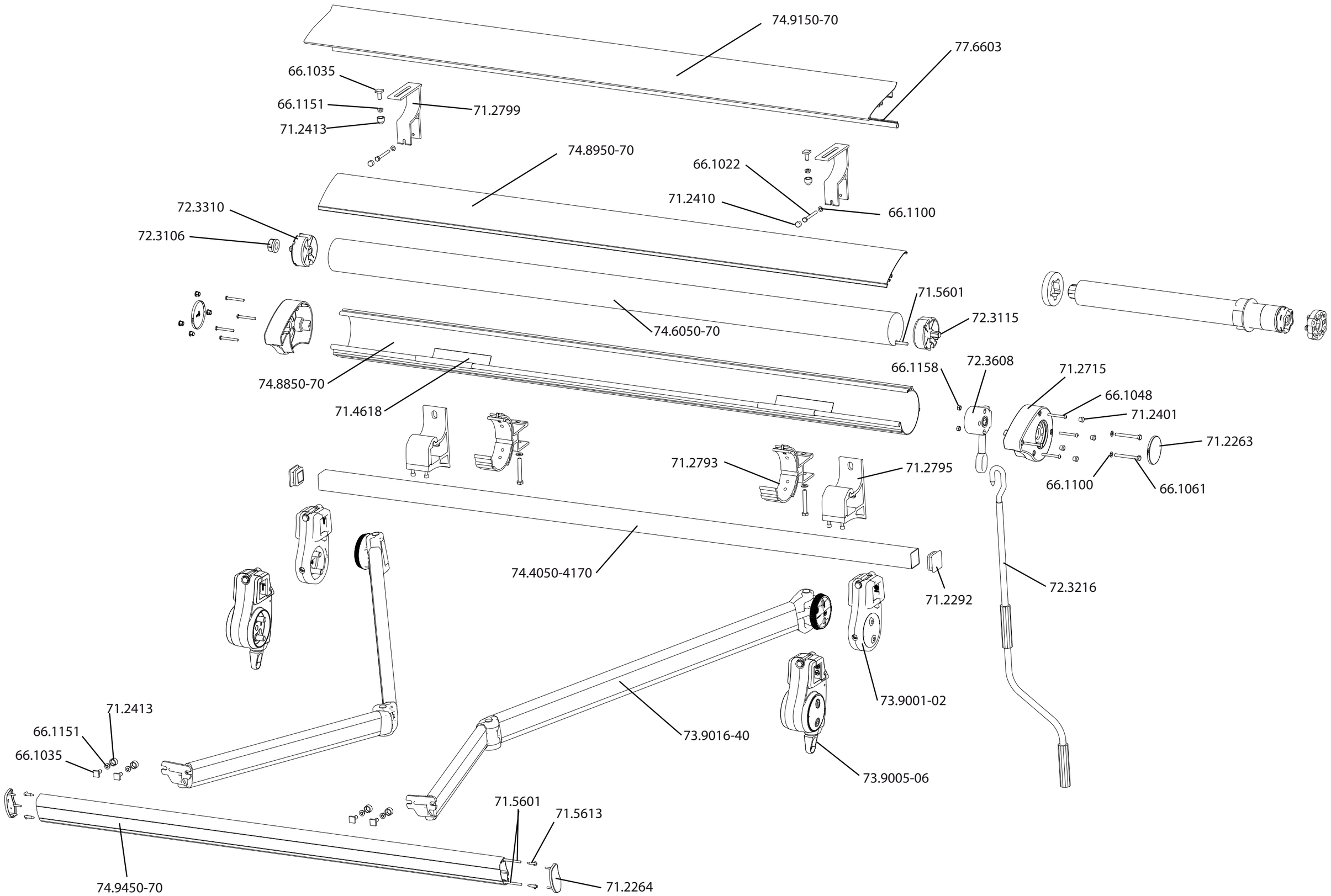
74.9150-70
77.6603
66.1035
66.1151
71.2799
71.2413
74.8950-70
66.1022
71.2410
66.1100
72.3310
72.3106
71.5601
72.3115
74.6050-70
74.8850-70
71.4618
66.1158
72.3608
71.2715
66.1048
71.2401
71.2263
66.1100
66.1061
71.2793
71.2795
74.4050-4170
71.2292
72.3216
73.9001-02
73.9016-40
73.9005-06
71.2413
66.1151
66.1035
71.5601
71.5613
74.9450-70
71.2264